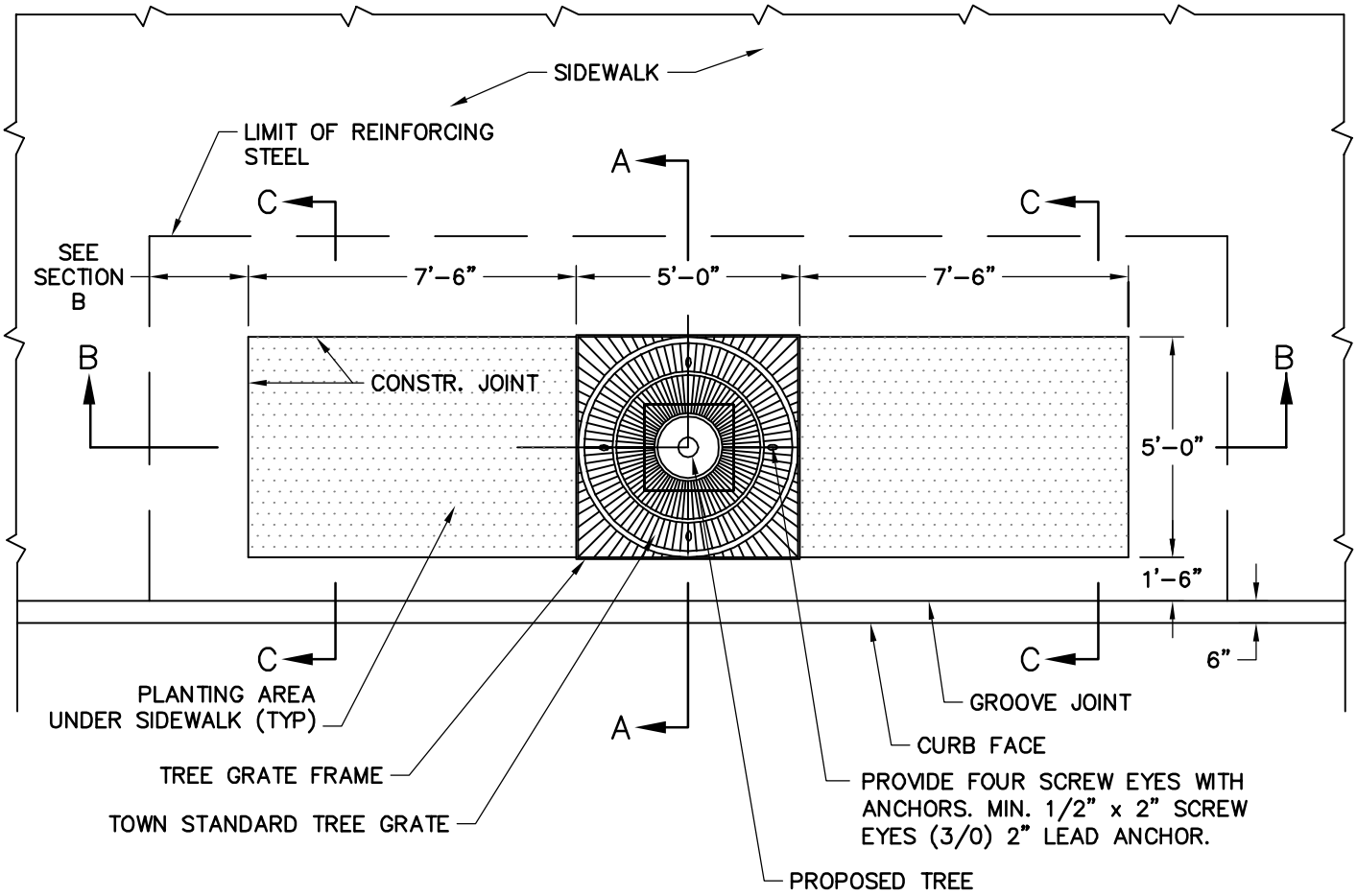

PLAN

REVISIONS	
DATE	DESCRIPTION

TOWN OF KNIGHTDALE STANDARD DETAILS	TREE PIT WITH GRATE IN SIDEWALK	STD. NO. 3.24